SALES & ENGINEERING DATA

RATIO SERIES:	1:1
FLUID P.S.I. RANGE:	20 - 100

66605X-XXX

1/2" NON-METALLIC DIAPHRAGM PUMP

RELEASED: 1-31-97
REVISED: 9-29-00
S-875

DIMENSIONAL DATA

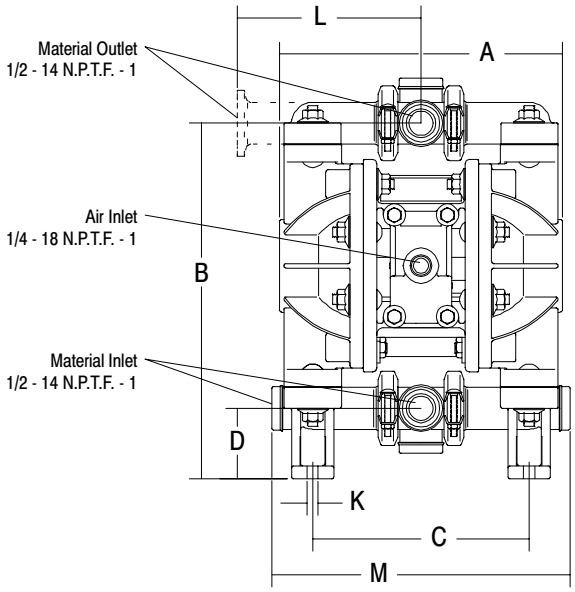

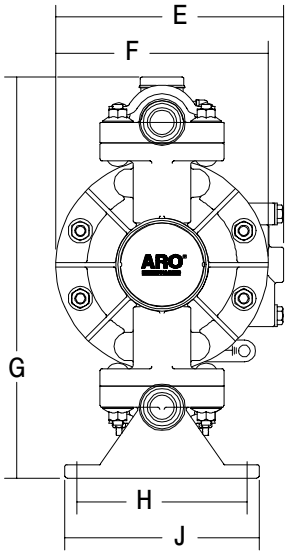

DIMENSIONS

A	8-5/32" (207 mm)	E	6-7/16" (164 mm)	J	5-1/2" (140 mm)
B	10-1/16" (256 mm)	F	6" (152 mm)	K	5/16" (8 mm)
C	6-5/32" (156 mm)	G	11-11/32" (288 mm)	L	5-3/16" (132 mm)
D	2-1/32" (51 mm)	H	4-13/16" (122 mm)	M	8-15/32" (215 mm)

NOTE: Dimensions are shown in inches and (mm), supplied for reference only and are typically rounded up to the nearest 1/16 inch.

SPECIFICATIONS

CONSTRUCTION

Model Series 66605X-XXX
Pump Type . . . . . Non-Metallic, Air Operated, Double Diaphragm③
Ratio 1:1
Material Inlet / Outlet . . . . . 1/2 - 14 N.P.T.F. - 1 (female)
Air Inlet . . . . . 1/4 - 18 N.P.T.F. - 1 (female)
Air Exhaust . . . . . standard – internal
optional – 3/8 - 18 N.P.T.F. - 1 (female)
Weight . . . . . Polypropylene – 7.2 lbs (3.3 kgs)
Groundable Acetal – 8.8 lbs (4.0 kgs)
Kynar (PVDF) – 9.5 lbs (4.3 kgs)
Air Section Service Kit 637141
Fluid Section Service Kit 637140-XX

66605X - X X X
637140 - X X
Diaphragm Material
Ball Material

EXAMPLE: Model 66605J-3EB
Fluid Section Service Kit is 637140-EB

PERFORMANCE

Air Inlet Pressure Range . . . . . 20 - 100 p.s.i. (1.4 - 6.9 bar)
Fluid Pressure Range . . . . . 20 - 100 p.s.i. (1.4 - 6.9 bar)
Maximum Flow Rate (flooded inlet) (ball check) 13 g.p.m. (49.2 l.p.m.)
(duckbill) 10 g.p.m. (37.9 l.p.m.)
Maximum Particle Size . . . . . (ball check) 3/32" dia. (2.4 mm)
(duckbill) fibers
Maximum Temperature Limits
Polypropylene . . . . . 35° to 150°F (2° to 66°C)
Groundable Acetal . 10° to 180°F (-12° to 82°C)
Kynar (PVDF) . . . . . 10° to 200°F (-12° to 93°C)
Displacement / Cycle @ 100 p.s.i. . (ball check) 0.040 gal (0.15 l)
(duckbill) 0.032 gal (0.12 l)
Noise Level @ 70 p.s.i. - 60 c.p.m.① 71.1 db(A)②

Notes:
① Tested with 66972 muffler installed.
② The pump sound pressure level has been updated to an Equivalent Continuous Sound Level (L_{Aeq}) to meet the intent of ANSI S1. 13-1971, CAGI-PNEUROP S5.1 using four microphone locations.
③ 666056-X and 66605H-X models are constructed of a groundable acetal. The material's conductivity allows it to be connected to a suitable ground.

ACCESSORIES:

66073-1 Air Line Connection Kit
93092 Exhaust Cover*
93107 Gasket*
93110 Muffler*

* External muffler for piped exhaust applications.

INGERSOLL-RAND COMPANY
P.O. BOX 151 • ONE ARO CENTER • BRYAN, OHIO 43506-0151
(419) 636-4242 • FAX (419) 633-1674

©2000 • PRINTED IN U.S.A.

PERFORMANCE CURVES
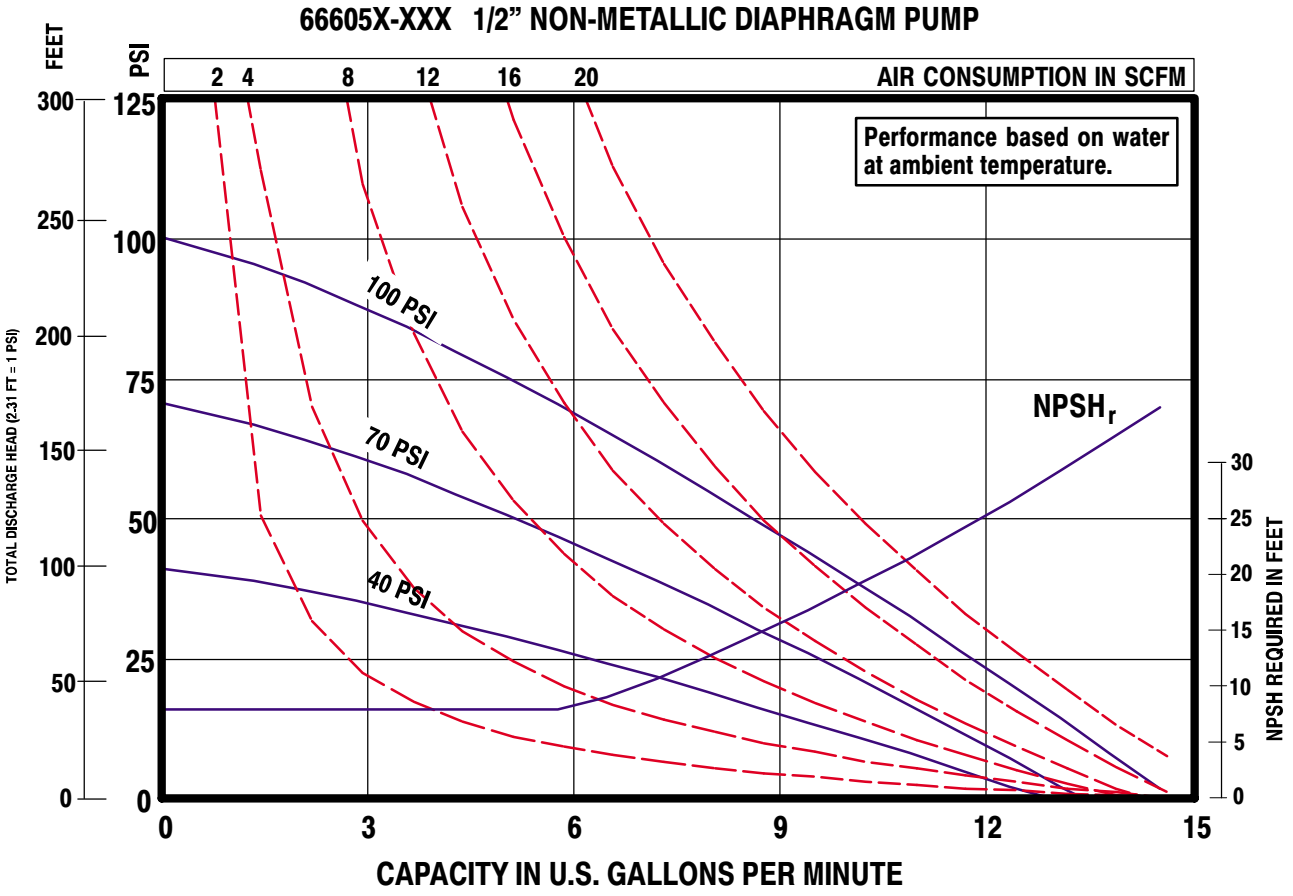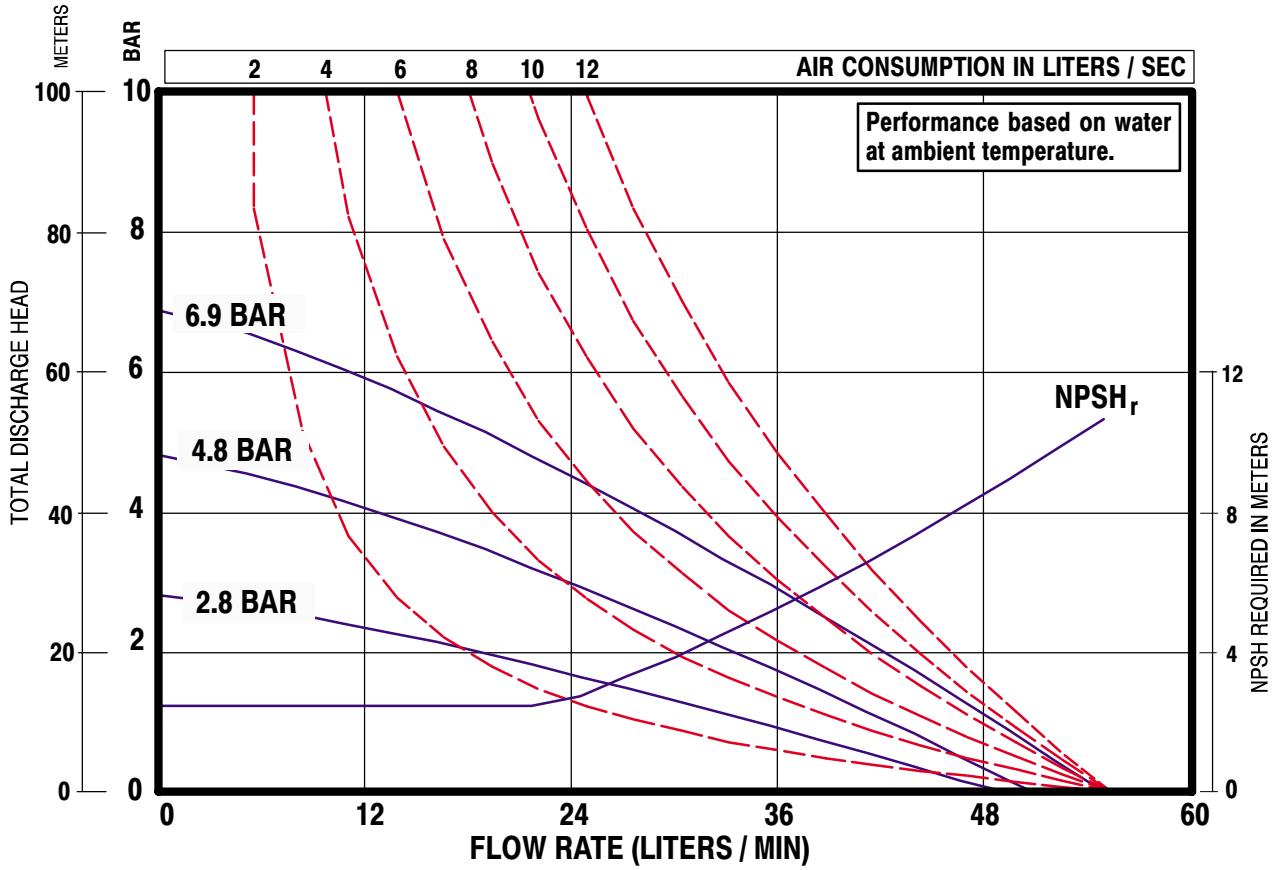
66605X-XXX 1/2" NON-METALLIC DIAPHRAGM PUMP